JOURNAL OF AEROSPACE SOCIETY MALAYSIA

ARTICLE

REVIEW OF FLIGHT DYNAMICS AND CONTROLLER DESIGN FOR UNSTABLE APPROACH DURING LANDING

Syed Asif Uz Zaman [1,*], Ermira Junita Abdullah [1] and Fairuz Izzuddin Romli [1]

1. Department of Aerospace Engineering, Faculty of Engineering, Universiti Putra Malaysia, 43400 Serdang, Selangor, Malaysia.

Correspondence: *asifuzzaman124@gmail.com

Abstract: This paper provides the essential literature review of aircraft controller design for the crucial landing phase. Fundamental ideas, modeling strategies, controller design approaches and most current developments in establishing safe and stable landings are covered in this overview. The purpose of the insights shared here is to support ongoing improvements in aircraft safety and operational effectiveness during landing.

Keywords: flight dynamics; stability; aircraft landing; unstable approach; controller design

1. Introduction

The number of air traffic worldwide has been on an increasing trend throughout the years. Though COVID-19 pandemic has seriously interrupted the progression, it has been projected that the recovery in the world's air passenger volume post-COVID 19 will rapidly resume to the traffic levels of 2019 in just one to two years [1]. In general, the high air traffic volume has brought about few important issues and challenges to the aviation industry, particularly in term of ensuring passenger safety and maintaining efficiency and sustainability of flight operations. Aircraft landing is one of the most crucial flight phases and it needs to be safely and precisely performed [2]. More often than never, aircraft face hard landing during an unstable approach, which is a concern for the aviation industry since this situation can cause notable damage to the aircraft's structure and affect the safety of the onboard passengers [3]. Unstable approaches have been accounted for 5% of all approaches worldwide and in nearly all cases, it becomes the leading risk factor for accidents during the landing flight phase [4].

The Accident Classification Task Force (ACTF) of International Air Transport Association (IATA) defines unstable approach as a factor to an aircraft accident when the crew proceeded to land the aircraft although they already had knowledge about any vertical, lateral or speed deviation in the portion of the flight close to landing [5]. In order to obtain the safe approach and landing, a carefully ordered sequence of changes to the configuration and also speed of the aircraft is necessary. These criteria must be met for an approach to be classified as stable. When these criteria are not satisfied, often due to unexpected changes, the approach is classified as unstable and the risk of landing accident or incident is increased [6]. Based on the reported statistics, majority of aircraft accidents occurred during the landing phase, which is about 65% of them, and these incidents were predominantly caused by unstable approach [7]. It should also be noted that pilot's workload is high during the landing phase as it is necessary to change both vertical and horizontal positions of the aircraft while at the same time reducing the aircraft speed and altering its configuration by deploying landing gear and flaps for the landing [8]. There are several different factors that could contribute towards unstable approaches in the landing phase. For instance, on top of the human factors, the complexity of the aircraft's flight dynamics during the landing phase

and the influence of the flying environment such as weather conditions and characteristics of the aircraft system can all affect the occurrence of unstable approaches [9]. A hard landing is a type of landing that often occurs because of unstable landing approach where the aircraft makes excessive impact with the runway due to a greater vertical speed than it supposed to [10]. Hard landing can have various negative effects on the aircraft, especially in damaging its systems and compromising its structural integrity. As reported, 41% of hard landing incidents have resulted from unstable approach [11].

There are limited literatures discussing about unstable approaches and most of them are focused on the perspective of air crew and also on statistical analysis of Question–Answer Relationship (QAR) or flight record [12]. The Gaussian Process (GP) offers fundamental, realistic and probabilistic method for creating kernel machines for data modelling [13]. A research on unstable approach detection method has been developed using previous real life flight data and several methods are introduced to determine unstable approach such as using the tracking data of surveillance with wind data, parameters of aircraft and knowledge of navigation [14]. This method improves the results of detecting of unstable approach, which has been proven by a case study. In the meantime, another study uses Gaussian process to detect unstable approach based on the historical flight data by analyzing the flight path anomaly. A model has been made for anomaly detection continuously throughout the aircraft's flight path to detect instability. It detects anomaly continuously during flight and sends data to ACTO to take the necessary action [13]. On the other hand, Ref. [15] discussed the hard landing incidents from the perspective of crew members and maintenance personnel. In the maintenance guidelines, certain SOP is provided to detect the hard landing and unstable approach for different aircraft. Furthermore, another conducted study is focused on understanding hard landing and unstable approach with the data of airspeed, runway, altitude and other related factors. It should be noted that different air traffic law and regulation agencies impose different SOPs to determine unstable approach and guidance to be followed by pilots in order to avoid hard landing and ensure the safety of onboard passengers and the aircraft's structure [16].

Different analyses are done to understand hard landing according to QAR data. By understanding the QAR data for different aircraft, specific hard landing criteria for different aircraft could be identified and the requirements for safe and stable landing can be established and implemented. Information from flight data monitoring (FDM) is typically used to find indicators of problematic approaches in aviation. Investigating the variables or parameters that might signal the presence of unstable approaches during aircraft's landing is the ultimate goal. In this paper, several flying parameters and their links with unstable approaches, most likely using dataset of flight data gathered during landing operations, are examined. Patterns and correlations between the flight parameters and the occurrence of unstable approaches can be established using statistical analytic techniques and machine learning algorithms [17]. In conjunction to this, such prediction of unstable approach can then be applied to develop suitable controller in order to avoid hard landing. In order to effectively provide a solution to this problem, this study will explore the answers for the following critical questions:

- What are the primary causes of hard landing during unstable approach?
- How can flight dynamic models accurately represent the behavior of an aircraft during unstable approaches?
- What are the control techniques that can be used to design suitable controller for preventing hard landing during landing phase?
- What are the limitation for designing the controller?
- How might the information gained from this study be used to improve landing procedures and flight safety in various types of aircraft?

Finding the answers to these questions will provide better understanding and leads to the best approach to improve safety during landing.

2. Flight Dynamic Modelling for Aircraft Landing

To understand stability of any aircraft in order to design a control system for it, it is very important to develop its flight dynamic model. The development of flight dynamic model of an aircraft during the landing phase has been discussed [18]. Such model development process is challenging since the landing process consists of several different phases and the aircraft's movement is continuously changing during each of these landing phases. In addition to the aerodynamic moment and force, gravitational force also acts on the aircraft during landing and once it touches down on the ground, the friction force starts to act on its wheels and subsequently on its structures. The longer the aircraft moves through the runway, the effects of aerodynamic forces become smaller and those of friction force are increased, which affect the longitudinal motion of the aircraft. Figure 1 show the forces acting on the aircraft during flight and the aircraft's motion parameters in the vertical plane.

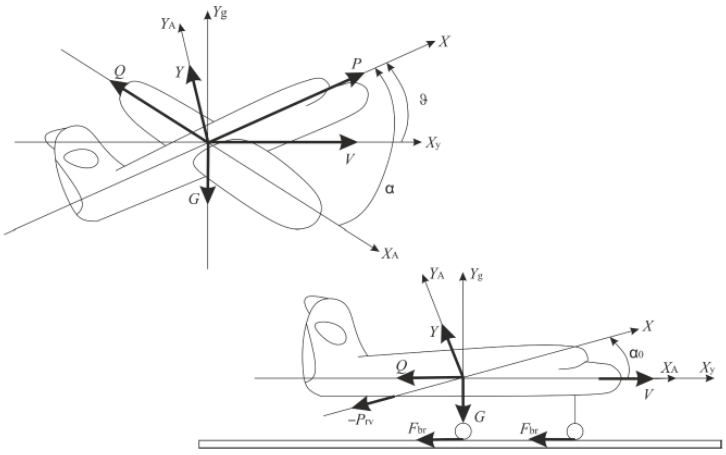

Figure 1: Forces acting on the aircraft during flight [19]

During landing, the forces acting on the aircraft are expressed by Equation 1 to Equation 3, where C_y and C_x are the aerodynamic force coefficients, S is the wing area, ϱ is the air density and v is the air speed.

$$m\frac{\mathrm{d}V_x}{\mathrm{d}\bar{t}} + m\left(\omega_y V_z - \omega_z V_y\right) = \sum F_x \tag{1}$$

$$I_z\frac{\mathrm{d}\omega_z}{\mathrm{d}t} = \sum_{i=1}^{m} M_{z_i} \tag{2}$$

$$m\frac{\mathrm{d}y_y}{\mathrm{d}\bar{t}} + m(\omega_z V_x - \omega_x V_z) = \sum F_y \tag{3}$$

As the airplane flies during flight, aerodynamic forces that are acting on the aircraft includes lift, Y and drag, X. They can be calculated using the following Equation 4 and Equation 5, respectively.

$$Y = C_y S\frac{\rho v^2}{2} \tag{4}$$

$$X = C_x S\frac{\rho v^2}{2} \tag{5}$$

Furthermore, adding the consideration of effects from gravitational forces, G and aircraft's engine thrust, P, the resultant equations are derived.

$$m\left(\frac{\mathrm{d}v_x}{\mathrm{d}t} + \omega_y v_z - \omega_z v_y\right) = P_X - X - G\sin\theta \tag{6}$$

$$m\left(\frac{\mathrm{d}v_y}{\mathrm{d}t} + \omega_z v_x - \omega_x v_z\right) = Y - G\cos\theta \tag{7}$$

In the meantime, the kinematic properties of the aircraft will also undergo several modifications as it moves along the runway. The aircraft's angular velocity will not change and both angle of attack and pitch will be constant. The direction of the aircraft's engine thrust, P is changed after its wheels make contact with the runway. The rolling resistance force will take the form of Equation 8, where kfr1 is the rolling resistance coefficient and G is the aircraft's weight. Furthermore, the dynamic model of aircraft landing can be stated as Equation 9.

$$F_{\mathrm{f11}} = k_{\mathrm{f11}}(GY) \tag{8}$$

$$m\frac{\mathrm{d}V}{\mathrm{d}t} = -P_{\mathrm{rv}}(\Delta t) - X - F_{\mathrm{fr1}} - F_{\mathrm{fr2(pd)}} - K_{1Ux}U_x - K_{2Uy}U_x \tag{9}$$

Since X and Y components of the aerodynamic forces are also developed in accordance with U_x, the relationships can be re-written as Equation 10 and Equation 11.

$$K_{1Ux}U_x = \Delta X = \left(C_x^V \quad S\frac{\rho V^2}{2}\right)U_x + \left(C_x S\frac{\rho 2V}{2}\right)U_x = \frac{S\rho V^2}{2}\left(\frac{c_x^M}{a_H} + \frac{2C_x}{V}\right)U_x \tag{10}$$

$$K_{2cy}U_x = \Delta Y = \left(C_y^V S\frac{\rho V^2}{2}\right)U_x + \left(C_y S\frac{\rho 2V}{2}\right)U_x = \frac{S\rho V^2}{2}\left(\frac{c_y^M}{a_H}\frac{2C_y}{V}\right)U_x \tag{11}$$

3. Automatic Control of Aircraft During Landing

Flight Dynamics Model (FDM) is representation of a set of mathematical equations that are used for calculation the forces that are physically acting on any flying vehicles. The motion of an aircraft is related to its six degrees of freedom (6DOF) from the second Newton's Law, which could be described as a system of first-order non-linear differential equations. The equations of motion can be taken as the fundamental for all models related to flight dynamics. In FDM, non-linear equations have been used to describe the flight stability of an aircraft. In this case, mathematical representation of the aerodynamic forces and moments that are acting on the aircraft and the equations of motion for the aircraft are used to develop the 6DOF non-linear flight model.

A unique sliding mode control strategy in lateral-directional plane has been proposed to be used to automatically manage an aircraft during the landing phase. A navigation system and a control system make up the two main components of this proposed control system. With this system, the aircraft will follow the intended lateral path and heading angle generated by the guidance system during the landing approach. The aircraft's roll and yaw rates are managed by the control system while the tracking of the intended lateral path and heading angle is done using a sliding mode controller. The effectiveness of this suggested control system in managing lateral motion of the aircraft during landing has already been

demonstrated in Ref. [20], even in the presence of external disturbances and uncertainties, using a high-fidelity aircraft simulator. The non-linearization of the aircraft's non-linear dynamics is achieved based on the small disturbance method of a trajectory of equilibrium. The general non-linear model can be expressed by Equation 12 to Equation 19.

$$\dot{\beta} = a_{11}\beta + a_{12}p + a_{13}r + a_{14}\varphi + b_{11}\delta_a + b_{12}\delta_r + \frac{a_{11}}{V_0}V_{vy} \tag{12}$$

$$\dot{p} = a_{21}\beta + a_{22}p + a_{23}r + b_{21}\delta_a + b_{22}\delta_r + \frac{a_{21}}{V_0}V_{vy} \tag{13}$$

$$\dot{r} = a_{31}\beta + a_{32}p + a_{33}r + b_{31}\delta_a + b_{32}\delta_r + \frac{a_{31}}{V_0}V_{vy} \tag{14}$$

$$\dot{\varphi} = p \tag{15}$$

$$\dot{\psi} = r \tag{16}$$

$$\dot{Y} = -V_0\beta + V_0\psi + V_{vy} \tag{17}$$

$$\dot{\delta}_a = -\frac{1}{T_a}\delta_a + \frac{1}{T_a}\delta_{a_c} \tag{18}$$

$$\dot{\delta}_r = -\frac{1}{T_r}\delta_r + \frac{1}{T_r}\delta_{r_c} \tag{19}$$

Virtual dynamic model design and analysis is very important for understanding and design of flight characteristic of any aircraft. It is recommended to explore all mechanisms and fundamental concepts of flight dynamics. This is an initial inquiry that commences by scrutinizing the modeling of all pertinent actions that affect the system being studied through utilization of the aircraft's dynamics. The primary objective is to devise a simplified approach for mathematical calculation of the dynamic equations of the aircraft and then forecast the initial phase of flight via dynamic simulation. This is accomplished by using both symbolic and numerical computations in a versatile program constructed on the MATLAB simulation environment. Initially, the system dynamic model is symbolically generated and proficient computational techniques are then employed to numerically solve it, resulting in a solution. A sample flow chart diagram of the control system for the aircraft's motion in lateral plane is shown in Figure 2.

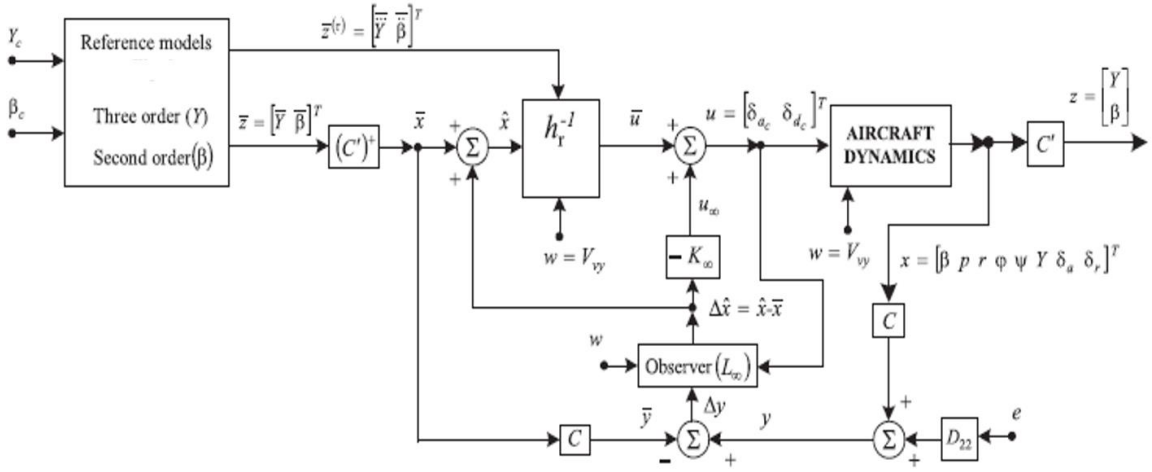

Figure 2: Block diagram of an aircraft's controller in lateral plane using H-infinity control [20]

A study shows the effectiveness of using PID controller design theory in designing an automatic landing system of an aircraft for the longitudinal plane using dynamic inversion concept to non-linearize the system. The design of aircraft's landing control for longitudinal phase using fuzzy logic technique has been discussed and from the result, the performance of the controller is significantly enhanced [21]. Moreover, controller design in the longitudinal plane using dynamic inversion and H-infinity control method can also improve the performance of the designed controller, which can be applied in the lateral directional plane of the aircraft. The idea of the "H-infinity norm", a mathematical way of defining how sensitive a system is to disturbances, serves as the foundation for H-infinity management. In H-infinity control, a controller is developed to minimize the system transfer function's H-infinity norm while still adhering to certain performance criteria such as stability and also tracking demands [22]. The dynamic inversion technique provides an excellent precision tracking whereas H-infinity control provides robust stability against uncertainties introduced by various disturbances and noise signals. This combination makes the outcome of the controller better and decreases the overshoot and settling time [23].

When designing the controller for the H-infinity control, optimization procedures and linear matrix inequalities (LMIs) from control theory are used. The process usually entails simulating the dynamics of the system, including uncertainties and disturbances, then formulating an optimization problem to identify the best controller for minimizing the H-infinity norm. The control system's implementation of the resulting controller allows for reliable performance. For designing the aircraft's landing control system, both longitudinal and lateral planes are treated simultaneously and the controller's performance is similar to the controller designed for different planes. The pilot must correct the lateral deviation of the aircraft from the runway before the two main phases of landing in longitudinal plane. The automatic landing system (ALS) consists of three different sub-systems that have been developed separately. The numerical simulations are used to implement, test and validate the entire ALS. For longitudinal stability, pitch controller is developed using linear quadratic gain (LQR) method, which is the controller design method that gives optimal controlled feedback gains for close loops and is used for high performance control system designing. LQR is widely used to design high performance control systems and to find optimal gains [24]. LQR is a controller that is similar to the method of selecting the location of poles. The difference is that, instead of select the poles location, feedback gain values of matrix K is obtained by minimizing the cost function to design the controller according to the design requirements.

A continuous-time linear system could be expressed as Equation 20 while the cost function could be defined as in Equation 21. In these equations, the state weighting factor is Q whereas the weighting factor is R of the variables of the control. Unlike the classical or digital logic, which processes discrete values of 1 or 0 (true or false, respectively), fuzzy logic analyzes the analog input values using the logical variables that take continuous values between the analog input values. It is a mathematical system that ranges between 0 and 1. The algorithm provides a scope to represent uncertainties based on a complex model. Fuzzy controller with use of a neural network can provide signal of aircrafts stability in different landing phase and the linearized model provides error signal and improve the performance of automatic flight control system of aircraft [25].

$$\dot{x} = Ax + Bu \tag{20}$$

$$J = \int_0^\infty (x^T Q x + u^T R u) dt \tag{21}$$

4. Conclusion

From the literatures, it has been found that there are many literatures that have discussed the hard landing and also unstable approach criteria and determination. Aircraft often face hard landing during

an unstable approach, which is a matter of concern for the aviation industry at it causes damage to the aircraft's structure and affects the passenger's safety. Many published articles are discussing the unstable approach criteria for different types of aircraft, which are dictated by the different safety and regulation authorities. Nevertheless, there are limited literatures that talk about determining the unstable approach and most of them have been focused on the perspective of air crew and others such as statistical analysis of QAR or flight record. There are some conducted studies on developing new models for the aircraft's unstable approach. These models can detect unstable approach to prevent hard landing more efficiently and link with flight control system to make the aircraft stable. Another important aspect of the research is the flight dynamic modelling of the aircraft during flight and during landing. Regarding the automated flight control system for landing, there are different studies based on PID, LQR and H-infinity control strategy. For aircraft's control during landing, the important aspect is its stability for longitudinal plane and lateral plane. There are studies discussing control design in these planes. The current limitation of the literatures is that there are not many literatures that study about controller design for hard landing prevention during aircraft's unstable approach for landing. Therefore, use of existing methods and data to develop a controller for unstable approach that can prevent hard landing needs to be further explored in future.

References

[1] M. C. Gelhausen, P. Berster and D. Wilken, 'Post-COVID-19 Scenarios of Global Airline Traffic until 2040 that Reflect Airport Capacity Constraints and Mitigation Strategies'. Aerospace, vol. 8, no. 10, 2021.

[2] C. Krammer, C. Mishra and F. Holzapfel, 'Testing and Evaluation of a Vision-Augmented Navigation System for Automatic Landings of General Aviation Aircraft', Proceedings of AIAA Scitech Forum, Orlando, USA, 6-10 January, 2020.

[3] M. B. Messaoud, 'A Thorough Review of Aircraft Landing Operation from Practical and Theoretical Standpoints at an Airport Which May Include a Single or Multiple Runways', Applied Soft Computing, vol. 98, 106853, 2021.

[4] R. J. de Boer, T. Coumou, A. Hunink and T. van Bennekom, 'The Automatic Identification of Unstable Approaches from Flight Data', Proceedings of the 6th International Conference on Research in Air Transportation, Istanbul, Turkey, 26-30 May 2014.

[5] Y. Rui and L. Renli, 'Detection Strategy of Unstable Approach Based on Possibility Measure', Proceedings of the Chinese Control and Decision Conference, Nanchang, China, 3-5 June 2019.

[6] D. Moriarty and S. Jarvis, 'A Systems Perspective on the Unstable Approach in Commercial Aviation', Reliability Engineering & System Safety, vol. 131, pp. 197-202, 2014.

[7] J. H. Jeon, J. Song, C. J. Jung and B. H. Song, 'A Study on Countermeasures to Prevent Unstable Approach to Improve Aviation Safety', Journal of the Korean Society for Aviation and Aeronautics, vol. 26, no. 3, pp. 1-8, 2018.

[8] Y. H. Lee and B. S. Liu, 'Inflight Workload Assessment: Comparison of Subjective and Physiological Measurements', Aviation, Space and Environmental Medicine, vol. 74, no. 10, pp. 1078-1084, 2003.

[9] R. Mori, 'Anomaly Detection and Cause Analysis During Landing Approach using Recurrent Neural Network', Journal of Aerospace Information Systems, vol. 18, no. 10, pp. 679-685, 2021.

[10] D. Gil, A. Hernandez-Sabate, J. Enconniere, S. Asmayawati, P. Folch, J. Borrego-Carazo and M. A. Piera, 'E-pilots: A System to Predict Hard Landing During the Approach Phase of Commercial Flights', IEEE Access, vol. 10, pp. 7489-7503, 2021.

[11] International Air Transport Association, Unstable Approaches: Risk Mitigation Policies. Procedures and Best Practices, 2016.

[12] L. Wang, C. Wu and R. Sun, 'An Analysis of Flight Quick Access Recorder (QAR) Data and Its Applications in Preventing Landing Incidents', Reliability Engineering & System Safety, vol. 127, pp. 86-96, 2014.

[13] N. P. Singh, S. K. Goh and S. Alam, 'Real-time Unstable Approach Detection using Sparse Variational Gaussian Process', Proceedings of the International Conference on Artificial Intelligence and Data Analytics for Air Transportation, Singapore, 3-4 February 2020.

[14] L. Sherry and J. Shortle, 'Improving the Nowcast of Unstable Approaches', Proceedings of 8th International Conference on Research in Air Transportation, 2016.

[15] N. Bardou and D. Owens. (2014). Hard Landing, a Case Study for Crews and Maintenance Personnel. Retrieved from https://safetyfirst.airbus.com

[16] Civil Air Navigation Services Organization. (2013). Unstable Approaches: Air Traffic Control Considerations. Retrieved from https://www.icao.int

[17] D. A. Carroll, Examining Unstable Approach Predictors Using Flight Data Monitoring Information, Embry-Riddle Aeronautical University, 2020.

[18] A. Suharevs, P. Trifonovs-Bogdanovs, V. Šestakovs and K. Mamay, 'Dynamic Model of Aircraft Landing', Transport and Aerospace Engineering, vol. 3, no. 1, pp. 38-43, 2016.

[19] B. Etkin and L. D. Reid, Dynamics of Flight: Stability and Control, John Wiley & Sons, 1995.

[20] R. Lungu and M. Lungu, 'Automatic Control of Aircraft in Lateral-Directional Plane During Landing', Asian Journal of Control, vol. 18, no. 2, pp. 433-446, 2016.

[21] R. Lungu, M. Lungu and L. T. Grigorie, 'Automatic Control of Aircraft in Longitudinal Plane During Landing', IEEE Transactions on Aerospace and Electronic Systems, vol. 49, no. 2, pp. 1338-1350, 2013.

[22] N. Lungu, R. Lungu and D. Tutunea, 'Control of Aircraft Landing using the Dynamic Inversion and the H-inf Control', Proceedings of 17th International Carpathian Control Conference, High Tatras, Slovakia, 29 May-1 June 2016.

[23] J. Che and D. Chen, 'Automatic Landing Control using H/sub/spl infin// Control and Stable Inversion', Proceedings of the IEEE Conference on Decision and Control, Orlando, USA, 4-7 December 2001.

[24] A. Ashraf, W. Mei, L. Gaoyuan, M. M. Kamal and A. Mutahir, 'Linear Feedback and LQR Controller Design for Aircraft Pitch Control', Proceedings of 4th International Conference on Control Science and Systems Engineering, Wuhan, China, 21-23 August 2018.

[25] J. G. Juang and J. Z. Chio, 'Fuzzy Modelling Control for Aircraft Automatic Landing System', International Journal of Systems Science, vol. 36, no. 2, pp. 77-87, 2005.